IRONTECH
Industrial Computers

AD12

19” RACKMOUNT
MODELL: AD12-FR

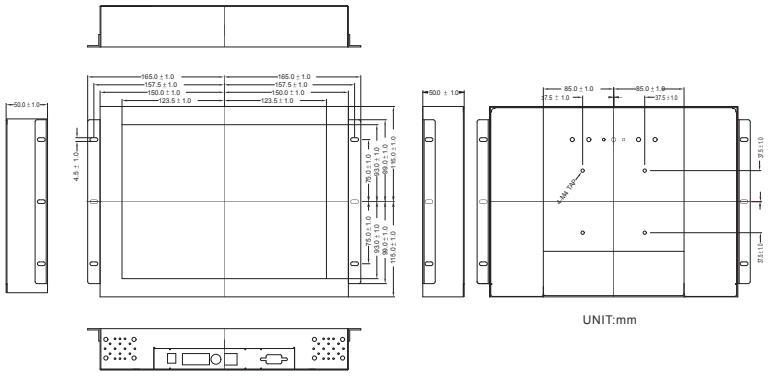

FRITTSTÅENDE
MODELL: AD12-FC

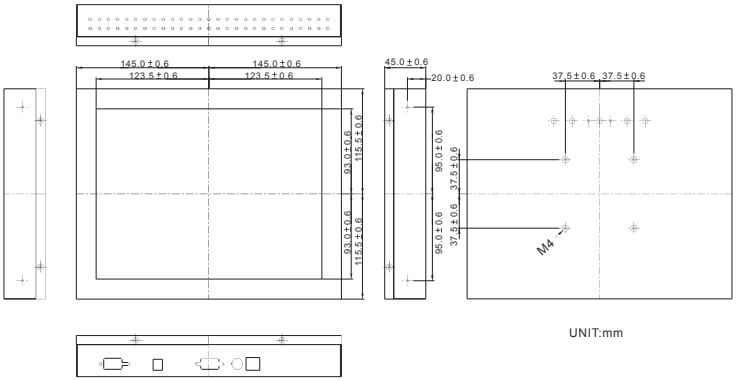

PANEL MONTERT
MODELL: AD12-FP

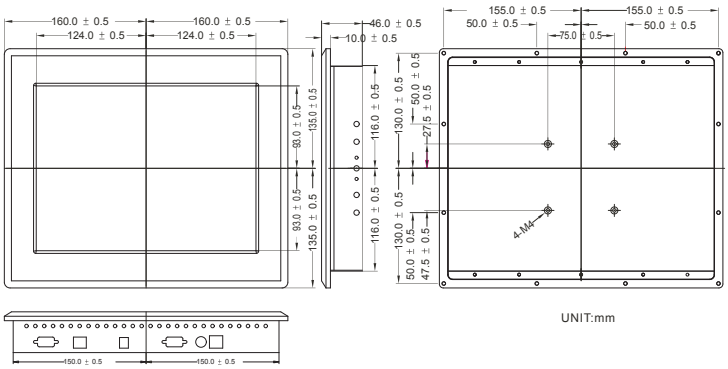

OPEN FRAME
MODELL: AD12-FO

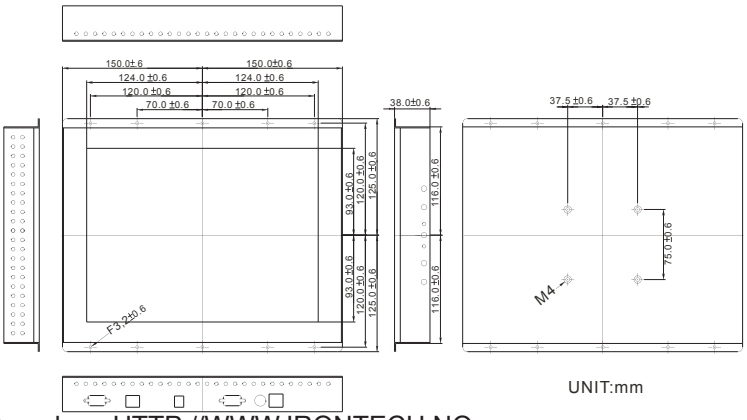

Irontech AS Astridsvei 1, 1473 Lørenskog, HTTP://WWW.IRONTECH.NO
Email: irontech@irontech.no TLF: (+47) 6798 8850 FAX: (+47) 6790 5760